DEPARTMENT OF AEROSPACE ENGINEERING

INDIAN INSTITUTE OF TECHNOLOGY, BOMBAY

DESIGN REPORT

INTAKE DESIGN FOR SUPERSONIC PASSENGER AIRCRAFT

Design Point: Cruise (Mach 2)

SUBMITTED BY:

GROUP – 5

CONTENTS:

S. no.	Title	Page No.
1.	Introduction	3
2.	Specifications	4
3.	Assumptions	4
4.	Formula Table	4
5.	Calculations	5
6.	Intake CAD model	9
7.	Conclusion	9
8.	References	10

1. INTRODUCTION:

Intakes are the most important part of the gas turbine engine, as the flow enters the engine, intake should ensure that the flow entering the engine is of highest uniformity. Intake Design for a supersonic aircraft essentially constitute of two major components that are Supersonic diffuser and a subsonic diffuser section which enables the air to be delivered in the compressor face with minimum stagnation pressure loss (highest possible pressure recovery).

Highest possible pressure recovery can be achieved by providing supersonic flow to gradually reduce to lesser Mach number by using the curved ramp, but the difficulty to anchor the shocks to the lip of the cowl becomes difficult.

Figure1. Supersonic Intake (Fighter Aircrafts)

At the throat (the minimum area), a normal shock is preferred to diffuse the flow from low supersonic to subsonic. If there would be less number of oblique shocks, it would lead to high upstream Mach number to the normal shock, which leads to huge pressure loss. It is optimum to present two oblique shocks and one terminating normal shock for the supersonic intakes.

SPECIFICATIONS:

1. Engine : GE F110 -129
2. Design Point: Cruise (Mach 2)
3. Position: Wing Shielded
4. Given Mass flow rate (Cruise) of engine : 122.4 kg/sec
5. Maximum Diameter of the engine face (Given) : 1.2m

ASSUMPTIONS:

1. Subsonic Diffuser Angle: 4°
2. Area throat ≈ Area of intake face (A_1)
3. Distance from Shock ramp to subtended lip: 1.3 m
4. Cruise Altitude: 40,000ft.

FORMULA TABLE:

S. no.	Title	Formula
1.	$\tan\theta$ β M relation	$\tan\theta = \frac{2\,cot\beta\,(M^2 Sin^2\beta - 1)}{M^2(\gamma + cos2\,\beta) + 2}$
2.	Subsonic Area Relation	$\frac{A_2}{A_1} = \frac{M_1[1 + \frac{\gamma-1}{2}{M_2}^2]^{\frac{\gamma+1}{2(\gamma-1)}}}{M_2[1 + \frac{\gamma-1}{2}{M_1}^2]^{\frac{\gamma+1}{2(\gamma-1)}}}$
3.	Pressure Recovery (Supersonic)	$\frac{P_{03}}{P_{0\infty}}$
4.	Inverse Area Ratio (μ)	$\frac{A_1}{A_\infty}$
5.	Corrected position ratio (wing shielded) J	$J = \frac{K.\ S}{A_1}$
6.	Empirical Factor K	$K = 0.8\ \ if\ 1 < \mu < 2$
7.	Geometrical Integral for Duct loss	$I = \int_{l_1}^{l_2} (\frac{A_1}{A})^2\ .\frac{g}{A} dl$
8.	Relation for $C_F\ duct$	$\mu^3 = \frac{J.C_{F\ approach}}{2\,.I.C_{F\ duct}}$
9.	Total pressure Loss (Duct + Approach)	$\frac{\Delta P_0}{q_\infty} = I.C_{F\ duct} + J.C_{F\ approach}.\mu^{-3}$
10.	Pressure Coefficient for flow separation (Gadd's Formula)	$C_{ps} = C_{pm} + 0.012\ \frac{l_p}{\theta_s} {R_\theta}^{-\frac{1}{4}}$

Table1. Formula Sheet

CALCULATION:

a) Design Point: **Cruise (Mach 2)**

Ramp angle	Mach no. (Upstream)	$\beta°$	Mach No. (Downstream)	Stag. Pressure ratio
15°	2	45°	1.4676	0.9482
5°	1.4676	50°	1.2638	0.9984

Table2. Mach number – Oblique Shock sheet

Normal Shock: Upstream Mach number = 1.2638

Downstream Mach number = 0.8050

Stagnation Pressure Ratio = 0.878

Total Stagnation pressure ratio (Supersonic Pressure Recovery)

$$\frac{P_{03}}{P_{02}} \cdot \frac{P_{02}}{P_{01}} \cdot \frac{P_{01}}{P_{0\infty}} = \frac{P_{03}}{P_{0\infty}}$$

$$\frac{P_{03}}{P_{0\infty}} = 0.9482 \times 0.9984 \times 0.8780 = 0.8740$$

b) Area of the throat (A_1), $M_1(subsonic\ face) = 0.8050$ & $M_2(engine\ face) = 0.4$

$$\frac{A_2}{A_1} = \frac{M_1[1 + \frac{\gamma-1}{2} {M_2}^2]^{\frac{\gamma+1}{2(\gamma-1)}}}{M_2[1 + \frac{\gamma-1}{2} {M_1}^2]^{\frac{\gamma+1}{2(\gamma-1)}}}$$

$$A_2(engine\ face) = \frac{\pi \times {D_{face}}^2}{4} = \frac{\pi \times 1.2^2}{4} = 1.310\ m^2$$

$$A_1 = 0.8536 m^2$$

Length of subsonic Diffuser calculated from simple geometric co-relations

Subsonic angle of diffuser = 4°

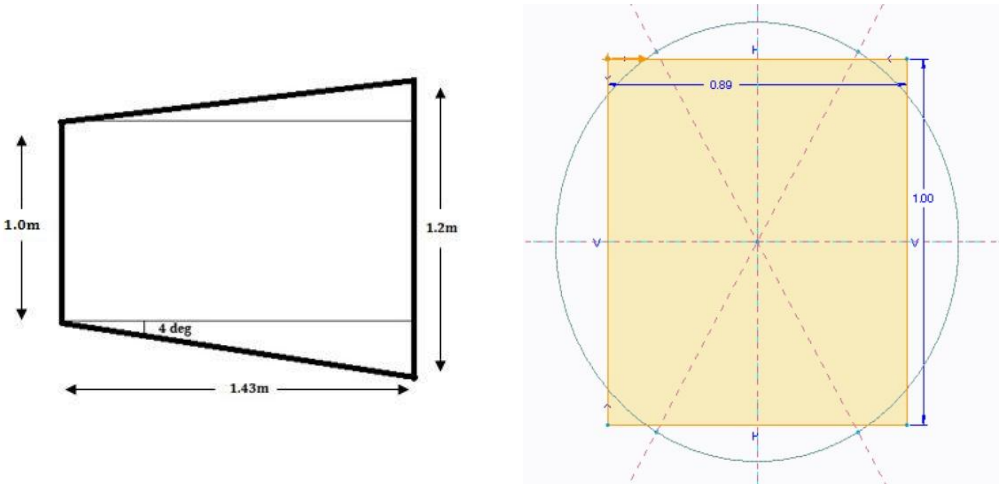

Figure3. Subsonic Diffuser Simplified (Considered Trapezium Shape)

Now, Using Figure4. $A_\infty = 0.464515\ m^2$ (Approx. for GE F110 engine)

$\mu = 1.732\ ; K = 0.8$

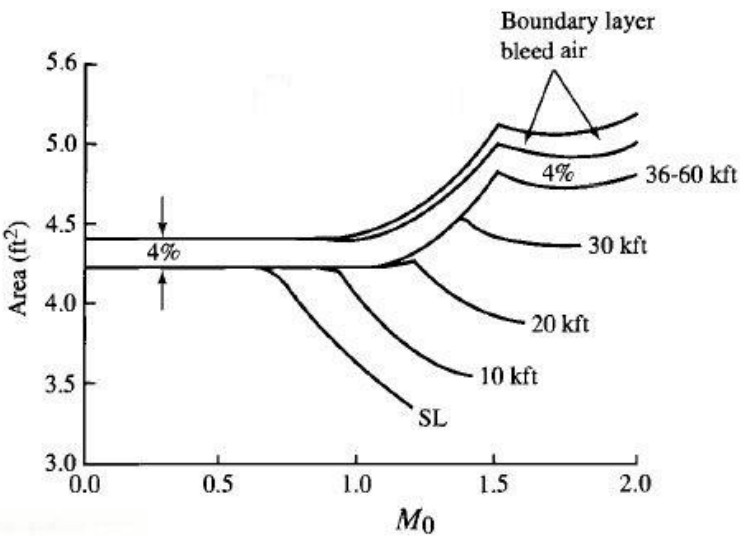

Figure4. Airflow Requirements at 40Kft. (Courtesy: Aircraft Engine Design, J.D. Mattingly)

c) Estimation of Approach loss: Lateral Surface Area: Area of frustum (Bucket shape) of subsonic diffuser: $S = \pi(r + R)\left(\sqrt{(R - r)^2 + h^2}\right)$

$$S = \pi\frac{(1.0124 + 1.2)}{2} \times \sqrt{\frac{(1.0124 + 1.2)^2}{4} + 1.43^2} = 6.282m^2$$

$$J = \frac{0.8 \times 6.282}{0.8050} = 6.2439$$

$$Approach\ losses:\ I = \int_{l_1}^{l_2} \left(\frac{A_1}{A}\right)^2 . \frac{g}{A} dl = 0.3330^2 \times 1.43^2 = 0.6809$$

According to $Intake\ Aerodynamics\ (Seddon\ J.)$

$C_{F\ approach} = 0.048$ For J = 6.2439 (Approx 6.5)

d) Duct Losses: By putting all these above values, $\mu^3 = \frac{J.C_{F\ approach}}{2\ .I.C_{F\ duct}}$; $C_{F\ duct} = 0.0422$

The approach and duct losses combined, calculated losses;

$$\frac{\Delta P_0}{q_\infty} = I.C_{F\ duct} + J.C_{F\ approach}.\mu^{-3} = 0.0864$$

e) Losses due to wing shielded intake. Wing at a sweep angle of 30°. From graph,

$$\frac{\Delta P_0}{q_\infty} = 0.019$$

f) Intake lip shape: Elliptic lip low loss in stagnation pressure at Mach number = 0.805

$$\frac{\Delta P_0}{q_\infty} = 0.008\ for\ elliptic\ from\ graph, Intake\ Aerodynamics(Seddon\ J.)$$

g) Total Pressure recovery subsonic: $1 - \frac{\Delta P_0}{q_\infty} = 0.8866\ or\ 88.66\%$

h) Boundary layer Approximation:

For supersonic diffuser section, the boundary layer is of very small order, hence major involvement is from subsonic diffuser section. The boundary layer is feeded by the adverse pressure gradient and results in increament along its length. It can be estimated from Gadd's formula and its plot.

$$C_{ps} = C_{pm} + 0.012\ \frac{l_p}{\theta_s} R_\theta^{-\frac{1}{4}}$$

C_{pm} for incompressible flow (low subsonic) ≈ 0.36

$C_{ps}\ from\ graph = 0.49$

$Reynolds\ number\ R_\theta\ for\ subsonic\ diffuser\ section\ at\ 40{,}000ft. = 76{,}523.5405$

$Momemtum\ thickness\ \theta_s = 5.58 \times 10^{-3}\ m$; $displacement\ thickness\ \delta = 9.96 \times 10^{-3} m$

i) Bleed and Diverters:

Bleed and Diverters are used to minimize the boundary layers and absorb distortion of flow by sucking inside the low speed moving flow through vents as shown in the figure below.

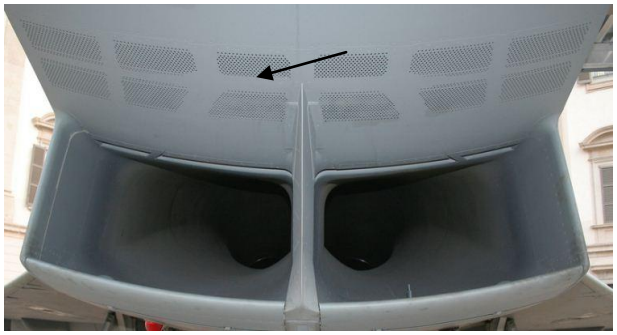

Figure5.Bleed ports to absorb boundary layer/distortion(Courtesy: EuroFighter)

Intake CAD Model:

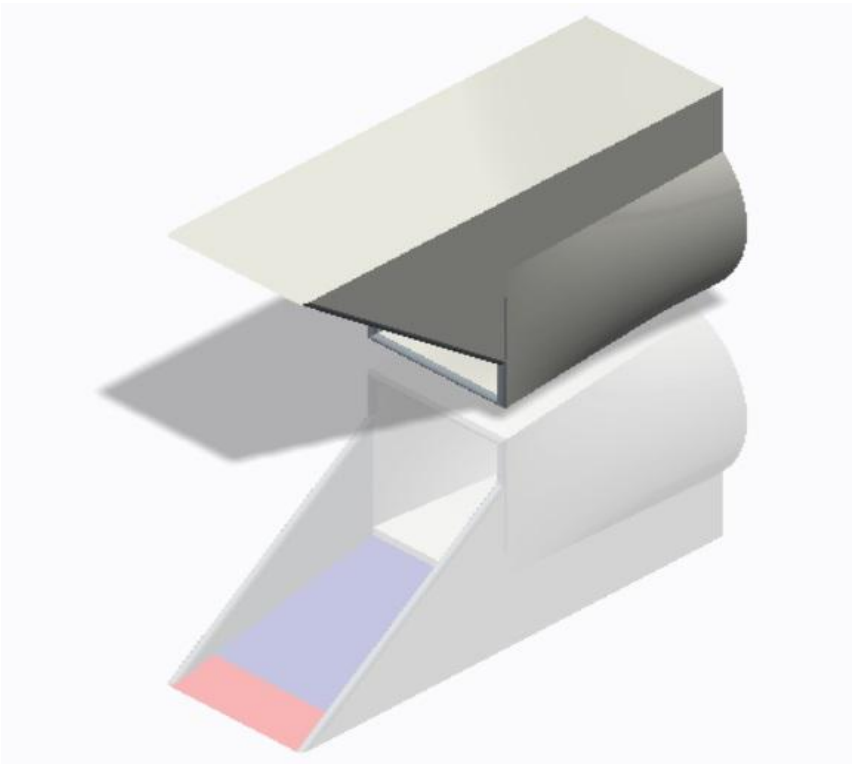

Figure6. Intake CAD Model (Isometric View)

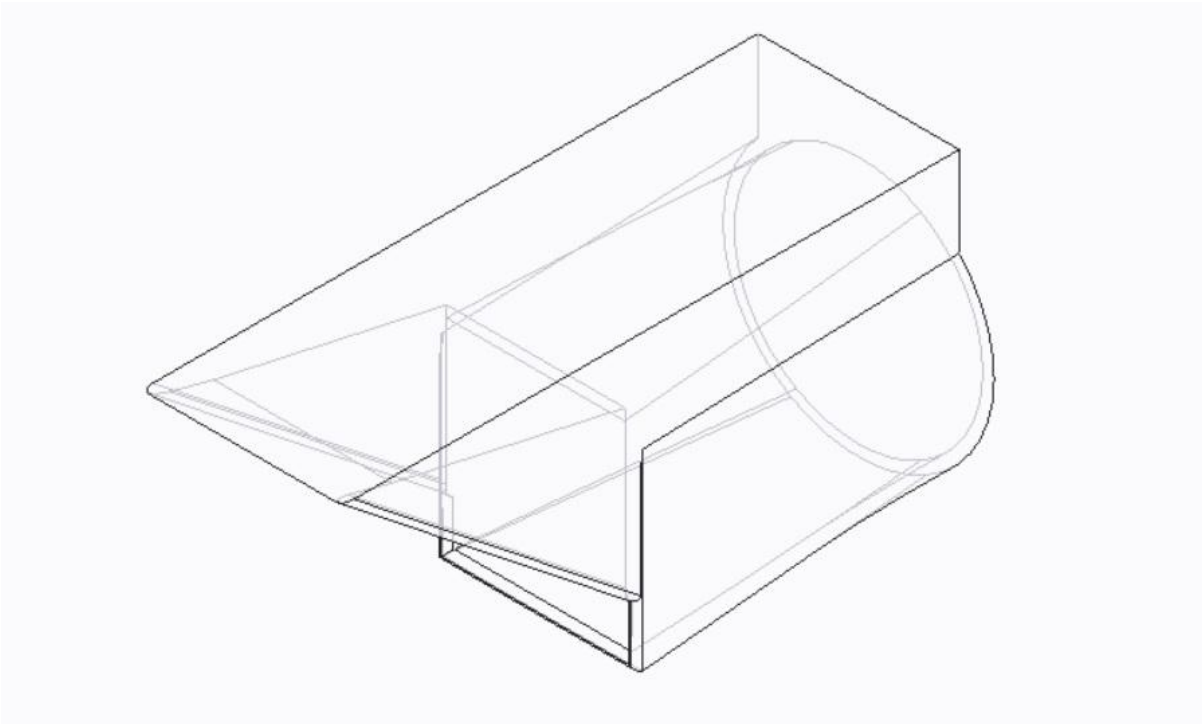

Figure7. Intake CAD Model (Isometric View)

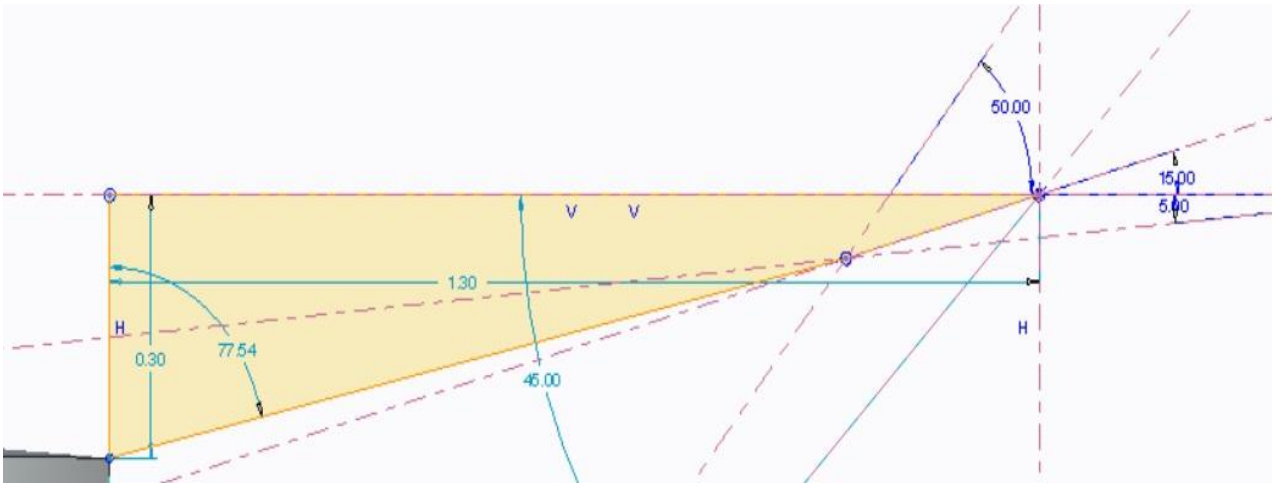

Figure7. Ramp CAD Model (Sketch)

Conclusion:

The intake design for supersonic aircraft was completed. It can be noticed that intake efficiency depends on the flow Mach number, At take off more mass flow can be drawn in by blow-in doors and reach to its design point i.e. cruise (Mach 2) for optimum efficiency.

Reference:

1. Seddon, J., and Goldsmith, E. L., *Intake Aerodynamics,* 2nd ed., AIAA Education Series, AIAA, Reston, VA, 1999.

2. Farokhi,S., *Aircraft Propulsion,* 2nd ed., Wiley & Sons Ltd.,West Sussex, United Kingdom, PQ, 198SQ.